

ZENITH IP65S Smart Trimless

Item code	**86.DS87.1419.02**
Product type	**Indoor**
Category	**Downlights**
Family	**ZENITH**
Subfamily	**ZENITH IP65S Smart Trimless**
Pictograms	

Dimensions	
Product dimensions (mm)	**85*85*121mm**

Scheme

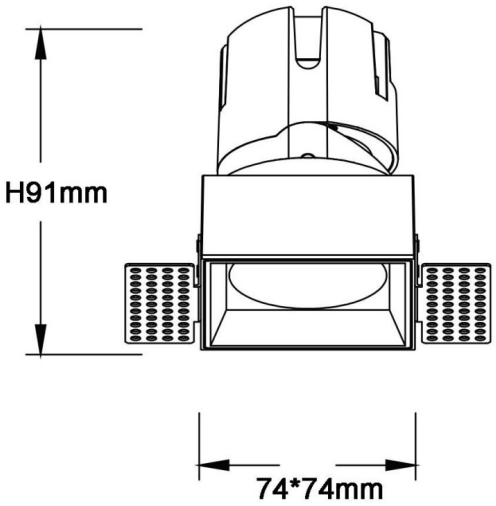

Product	
Real power (W)	**20**
Real luminous flux (Lm)	**1600**
Luminous efficiency (Lm/W)	**80**
Beam angle (º)	**12**
Life time (h)	**50000 h L80B10**
IP	**65**
U. G. R	**19**
Control gear	**DALI+wireless Casambi**
Colour temperature (K)	**4000**
Colour consistency (SDCM)	**SDCM3**
CRI	**80**